Iron ore slurry filtering solutions; final moisture controlled by PSC's NIR on-line moisture analyzers, MCT460

…"Iron ore is ground to finer particle sizes through different grinding systems. Large grinding mills using grinding ball media are one of the most common and particularly in pelletizing plants where finer particle size are required for the pelletizing process. Those large mills operate either with water mixed in with the ore – called wet grinding – or without water - dry grinding.

A fair amount of water is used in the wet grinding process. The material exiting the mills is in form of slurry with water content typically ranging from 30 to 50 %. The surplus of water should be removed prior to the balling process through dewatering equipment given that pelletizing requires a much lower moisture content (from 8 to 10 % for most plants).

We find few de-watering technologies in the industry, but slurry filtering through vacuum disc filters is still the main equipment seen in pelletizing operations and particularly in Canada, USA, Mexico, Brazil, Chile, Russia, Ukraine, etc."… (source http://www.metal7.com/en/solution/iron-ore-slurry-filtering-solution)

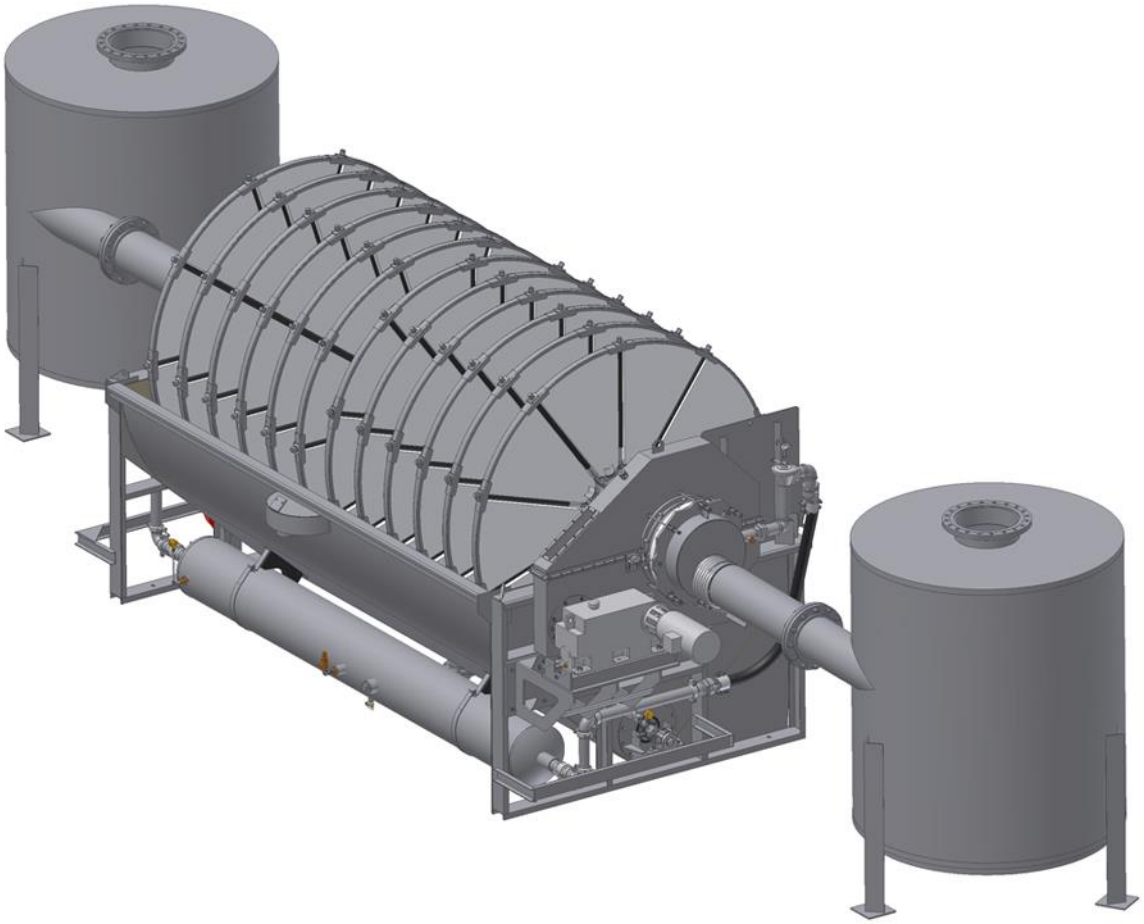

Slurry filtering through vacuum disc filters in Ukraine. A need of moisture measurement after each filters section.

DISC FILTERS

MCT460

CALIBRATION:

№	LAB	MCT460	Diff	Cal. MCT	Diff
1	10.65	10.75	0,10	10.58	-0,07
2	10,74	10,48	-0,26	10,49	-0,25
3	10,60	10,69	0,09	10,56	-0,04
4	11,20	10,61	-0,59	10,56	-0,60
5	10,60	10,23	-0,37	10,40	-0,20
6	10,60	10,78	0,18	10,59	-0,01
7	10,60	10,40	-0,20	10,46	-0,14
8	10,40	10,65	0,25	10,55	0,15
9	11,20	10,79	-0,41	10,63	-0,50
10	11,60	14,67	3,07	11,92	0,32
11	12,10	14,64	2,54	11,91	-0,19
12	10,70	11,66	0,96	10,89	0,19
13	10,70	11.83	1,13	10,95	0,25

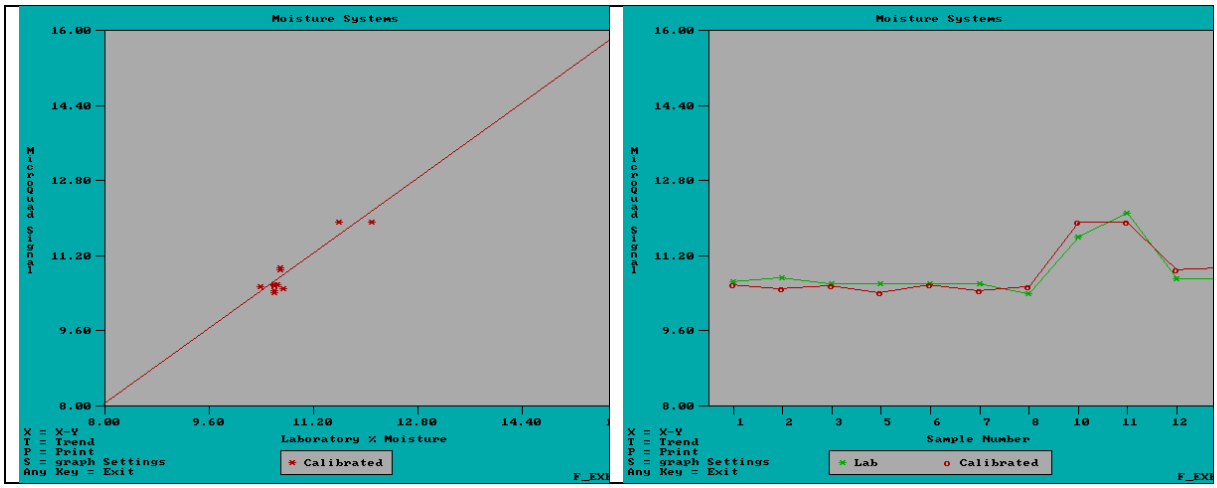

RMS Error: +/- 0.2% ; CC: 0.94

Filters: F1=xxnm ; F2=xxnm ; F3=xxnm

SPAN = xx ; ZERO = xx

Above described application / installation has been successfully implemented in May 2017 at two production plants in Ukraine

PELLETIZING PLANT

The iron ore concentrate with moisture of ca. 9.00 – 11.00% goes to the pelletizing plants. It will be mixed there with different binders. Mainly it's bentonite. Additionally will be added other minerals like e.g. CaO.

Next important control point for moisture is the outlet of the mixers.

TEST INTALLATION in Ukraine

SENSOR CONFIGURATION AND CALIBRATION

Filters: F1=XXnm ; F2=XXnm ; F3=XXnm

The additives like bentonite, CaO, etc. are varying. Important is the content of CaO. On this depends the parameter called in Russian Основность материала / in English something like "BASICITY". For each level of BASICITY another calibration parameters are needed.

Below calibrations for two different BASICITY values.

BASICITY / Основность материала of 0.12

SPAN= XXX ZERO = XXX RMS Error = +/-0.14 %

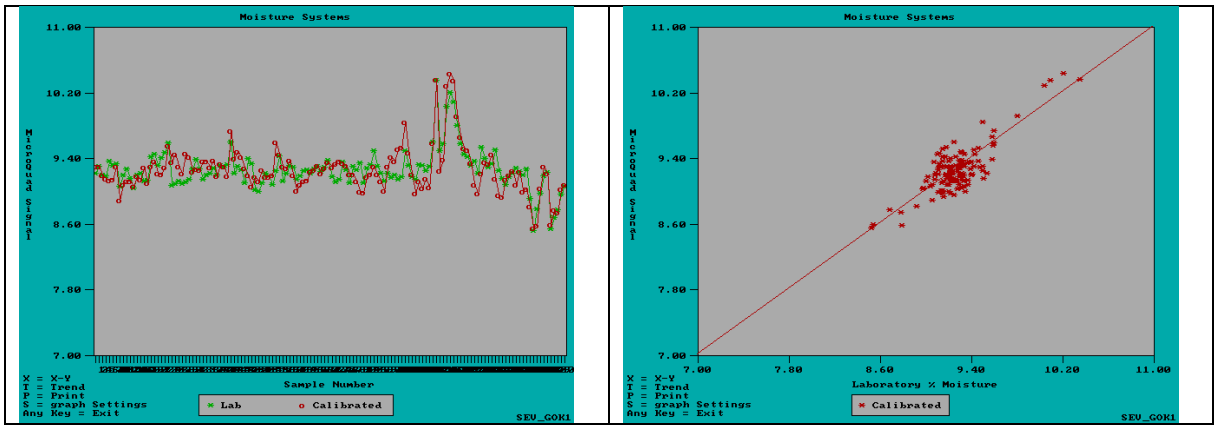

BASICITY / Основность материала of 0.50

SPAN= XX ZERO = XX

RMS Error = +/-0.11 %